# Work Order ID 68376

*Tuesday, April 12, 2011 1:10:50 PM*

PRELIMINARY ISSUE



**Item ID:** D4334-7
**Revision ID:** PRELIM
**Item Name:** Fairing

**Accept**

**Setup** **Start**
**Stop**

**Start Date:** 4/12/2011 **Start Qty:** 1.00
**Required Date:** 4/15/2011 **Req'd Qty:** 1.00
**Reference:**

**Cust Item ID:**
**Customer:**

**Approvals:** **Process Plan:** MF **Date:** 11-04-12 **Tooling:** _____ **Date:** _____
**QC:** _____ **Date:** _____ **SPC (Y/N):** _____ **Date:** _____

**Run** **Start**
**Stop**

| Sequence ID/ Work Center ID | Operation Description | Set Up/ Run Hours | Tool ID | Tool # | Plan Code | Accept Qty | Reject Qty | Reject Number | Insp. Stamp |
|---|---|---|---|---|---|---|---|---|---|
| **Draw Nbr** | **Revision Nbr** | | | | | | | | |
| D4334 | PA8 | | | | | | | | |
| 100 | | 0.00 | | | | | | | |
| HandThermo | **Memo** | 0.00 | | | | x1 | | | DL 11/04/12 |
| Hand Finishing Thermoforming | 1-Cut Sheet to required Blank size | | | | | | | | |
| 105 | | 0.00 | | | | | | | |
| HandThermo | Dry Material | | | | | x1 | | | DL 11/04/12 |
| Hand Finishing Thermoforming | **Memo** | 0.00 | | | | | | | |

Dry Sheet as per QSI022 POLYCARBONATE
Temp: 240° F
Time IN: 4:00 Am 11/04/11
Time OUT: 7:00 am 11/04/12

Dart Aerospace Ltd

| W/O: | | WORK ORDER CHANGES | | | | | |
|---|---|---|---|---|---|---|---|
| DATE | STEP | PROCEDURE CHANGE | By | Date | Qty | Approval Chief Eng / Prod Mgr | Approval QC Inspector |
| | | | | | | | |
| | | | | | | | |

**Part No:** _____ **PAR #:** _____ **Fault Category:** _____ **NCR:** Yes No **DQA:** _____ **Date:** _____

**Resolution:** _____ **Disposition:** _____ **QA: N/C Closed:** _____ **Date:** _____

| NCR: | | WORK ORDER NON-CONFORMANCE (NCR) | | | | | | |
|---|---|---|---|---|---|---|---|---|
| DATE | STEP | Description of NC Section A | Corrective Action Section B | | | Verification Section C | Approval Chief Eng | Approval QC Inspector |
| | | | Initial Chief Eng | Action Description Chief Eng | Sign & Date | | | |
| | | | | | | | | |
| | | | | | | | | |
| | | | | | | | | |

**NOTE:** Date & initial all entries

H:\fFORMS\Quality Assurance\approved QA\NCRWO RevE

# Work Order ID 68376

*Tuesday, April 12, 2011 1:10:50 PM*



**Item ID:** D4334-7
**Revision ID:** PRELIM
**Item Name:** Fairing

**Accept**

**Setup Start**
**Stop**

**Start Date:** 4/12/2011 **Start Qty:** 1.00
**Required Date:** 4/15/2011 **Req'd Qty:** 1.00
**Reference:**

**Cust Item ID:**
**Customer:**

**Run Start**
**Stop**

**Approvals:** **Process Plan:** _____ **Date:** _____ **Tooling:** _____ **Date:** _____
**QC:** _____ **Date:** _____ **SPC (Y/N):** _____ **Date:** _____

| Sequence ID/ Work Center ID | Operation Description | Set Up/ Run Hours | Tool ID | Tool # | Plan Code | Accept Qty | Reject Qty | Reject Number | Insp. Stamp |
|---|---|---|---|---|---|---|---|---|---|
| 110 | | 0.00 | | | | | | | |
| Thermoform | **Memo** | 0.00 | | | | x1 | | | DL 11/04/12 |
| Thermoforming Machine | 1-Machine Set-Up<br>2-Pre-heat Tool to required temp.<br>3-Thermoform as per Dwg and Folio #FTA106using tool DT9717<br>Dwg Rev: PA8<br>Folio Rev: A | | | | | | | | |
| 120 | QC2- Inspect parts off machine FAI/FAIB | 0.00 | | | | | | | |
| QC | **Memo** | 0.00 | | | | x1 | | | DL 11/04/12 |
| Quality Control | Visuallly inspect part for proper formation and texture | | | | | | | | |
| 130 | QC8- Inspect parts - second check | 0.00 | | | | | | | |
| QC | **Memo** | 0.00 | | | | x1 | | | BB 11/04/13 |
| Quality Control | | | | | | | | | |

Dart Aerospace Ltd

| W/O: | | WORK ORDER CHANGES | | | | | |
|---|---|---|---|---|---|---|---|
| DATE | STEP | PROCEDURE CHANGE | By | Date | Qty | Approval Chief Eng / Prod Mgr | Approval QC Inspector |
| | | | | | | | |
| | | | | | | | |

**Part No:** _____ **PAR #:** _____ **Fault Category:** _____ **NCR:** Yes No **DQA:** _____ **Date:** _____

**Resolution:** _____ **Disposition:** _____ **QA: N/C Closed:** _____ **Date:** _____

| NCR: | | WORK ORDER NON-CONFORMANCE (NCR) | | | | | | |
|---|---|---|---|---|---|---|---|---|
| DATE | STEP | Description of NC Section A | Corrective Action Section B | | | Verification Section C | Approval Chief Eng | Approval QC Inspector |
| | | | Initial Chief Eng | Action Description Chief Eng | Sign & Date | | | |
| | | | | | | | | |
| | | | | | | | | |
| | | | | | | | | |

**NOTE:** Date & initial all entries

H:\fFORMS\Quality Assurance\approved QA\NCRWO RevE

# Work Order ID 68376

*Tuesday, April 12, 2011 1:10:51 PM*



**Item ID:** D4334-7
**Revision ID:** PRELIM
**Item Name:** Fairing

**Accept**

**Setup Start**
**Stop**

**Start Date:** 4/12/2011 **Start Qty:** 1.00
**Required Date:** 4/15/2011 **Req'd Qty:** 1.00
**Reference:**

**Cust Item ID:**
**Customer:**

**Approvals:** **Process Plan:** _____ **Date:** _____ **Tooling:** _____ **Date:** _____
**QC:** _____ **Date:** _____ **SPC (Y/N):** _____ **Date:** _____

**Run Start**
**Stop**

| Sequence ID/ Work Center ID | Operation Description | Set Up/ Run Hours | Tool ID | Tool # | Plan Code | Accept Qty | Reject Qty | Reject Number | Insp. Stamp |
|---|---|---|---|---|---|---|---|---|---|
| 140 | | 0.00 | | | | | | | |
| HandThermo | **Memo** | 0.00 | | | | x1 | | | DL 11/04/13 |
| Hand Finishing Thermoforming | 1-Trim to finished dimensions as per Dwg | | | | | | | | |
| 150 | QC2- Inspect parts off machine FAI/FAIB | 0.00 | | | | | | | |
| QC | **Memo** | 0.00 | | | | x1 | | | DL 11/04/14 |
| Quality Control | Complete FAI document | | | | | | | | |
| 160 | QC5- Inspect part completeness to step on W/O | 0.00 | | | | | | | |
| QC | **Memo** JM-03 PA & only qty | 0.00 | | | | | | | |
| Quality Control | per e-mail | | | | | | | | |

Dart Aerospace Ltd

| W/O: | | WORK ORDER CHANGES | | | | | |
|---|---|---|---|---|---|---|---|
| DATE | STEP | PROCEDURE CHANGE | By | Date | Qty | Approval Chief Eng / Prod Mgr | Approval QC Inspector |
| | | | | | | | |
| | | | | | | | |

**Part No:** _____ **PAR #:** _____ **Fault Category:** _____ **NCR:** Yes No **DQA:** _____ **Date:** _____

**Resolution:** _____ **Disposition:** _____ **QA: N/C Closed:** _____ **Date:** _____

| NCR: | | WORK ORDER NON-CONFORMANCE (NCR) | | | | | | |
|---|---|---|---|---|---|---|---|---|
| DATE | STEP | Description of NC Section A | Corrective Action Section B | | | Verification Section C | Approval Chief Eng | Approval QC Inspector |
| | | | Initial Chief Eng | Action Description Chief Eng | Sign & Date | | | |
| | | | | | | | | |
| | | | | | | | | |
| | | | | | | | | |

**NOTE:** Date & initial all entries

H:\fFORMS\Quality Assurance\approved QA\NCRWO RevE

# Work Order ID 68376

*Tuesday, April 12, 2011 1:10:51 PM*



**Item ID:** D4334-7
**Revision ID:** PRELIM
**Item Name:** Fairing

**Accept**

**Setup Start**
**Stop**

**Start Date:** 4/12/2011 **Start Qty:** 1.00
**Required Date:** 4/15/2011 **Req'd Qty:** 1.00
**Reference:**

**Cust Item ID:**
**Customer:**

**Run Start**
**Stop**

**Approvals:** **Process Plan:** _____ **Date:** _____ **Tooling:** _____ **Date:** _____
**QC:** _____ **Date:** _____ **SPC (Y/N):** _____ **Date:** _____

| Sequence ID/ Work Center ID | Operation Description | Set Up/ Run Hours | Tool ID | Tool # | Plan Code | Accept Qty | Reject Qty | Reject Number | Insp. Stamp |
|---|---|---|---|---|---|---|---|---|---|
| 170 | Identify as per dwg & Stock Location:_____ | 0.00 | | | | | | | |
| Packaging | | | | | | 4/4/11 SP | | | |
| Packaging | **Memo** | 0.00 | | | | | | | |
| 180 | QC21- Final Inspection - Work Order Release | 0.00 | | | | | | | |
| QC | | | | | | | | | |
| Quality Control | **Memo** | 0.00 | | | | | | | |

POSITIVE RECALL
EFFECTIVE 4/4/13 AUTH
RELEASED _____ DATE _____

RP 2370

Dart Aerospace Ltd

| W/O: | | WORK ORDER CHANGES | | | | | |
|---|---|---|---|---|---|---|---|
| DATE | STEP | PROCEDURE CHANGE | By | Date | Qty | Approval Chief Eng / Prod Mgr | Approval QC Inspector |
| | | | | | | | |
| | | | | | | | |

**Part No:** _____ **PAR #:** _____ **Fault Category:** _____ **NCR:** Yes No **DQA:** _____ **Date:** _____

**Resolution:** _____ **Disposition:** _____ **QA: N/C Closed:** _____ **Date:** _____

| NCR: | | WORK ORDER NON-CONFORMANCE (NCR) | | | | | | |
|---|---|---|---|---|---|---|---|---|
| DATE | STEP | Description of NC Section A | Corrective Action Section B | | | Verification Section C | Approval Chief Eng | Approval QC Inspector |
| | | | Initial Chief Eng | Action Description Chief Eng | Sign & Date | | | |
| | | | | | | | | |
| | | | | | | | | |
| | | | | | | | | |

**NOTE:** Date & initial all entries

# Picklist Print

*Tuesday, April 12, 2011 1:10:45 PM*



**Work Order ID:** 68376

**Parent Item:** D4334-7

**Parent Item Name:** Fairing

**Start Date:** 4/12/2011 **Required Date:** 4/15/2011

**Start Qty:** 1.00 **Required Qty:** 1.00

**Comments:** IPP Rev. A New Issue 11/04/012 DL

| Component Item ID/ Item Name | Replacement Item ID | Mfg/ Purch | Bin Item | Primary Location | Last Location | Route Seq ID | Unit of Measure | Qty on Hand | Qty per Kit | Total Qty | Qty Issued | Date Issued | Status |
|---|---|---|---|---|---|---|---|---|---|---|---|---|---|
| MLEXS.125-F60029-04 | | Purchased | No | | | 100 | sf | 2,844.715 | 3.46875 | 3.46875 | | | |
| GE PLASTICS LEXAN SHEET | | | | | | | | | | | | | |

DL 11/04/14

| Location | Loc Qty | Loc Code |
|---|---|---|
| MAT018 | 2844.715789 | |
| 112585 | 56 | |
| 115261 | 768 | |
| ~~116236~~ | 2020.71579 | |

3.46875 sq ft

Dart Aerospace Ltd

| W/O: | | WORK ORDER CHANGES | | | | | |
|---|---|---|---|---|---|---|---|
| DATE | STEP | PROCEDURE CHANGE | By | Date | Qty | Approval Chief Eng / Prod Mgr | Approval QC Inspector |
| | | | | | | | |
| | | | | | | | |

**Part No:** _____ **PAR #:** _____ **Fault Category:** _____ **NCR:** Yes No **DQA:** _____ **Date:** _____

**Resolution:** _____ **Disposition:** _____ **QA: N/C Closed:** _____ **Date:** _____

| NCR: | | WORK ORDER NON-CONFORMANCE (NCR) | | | | | | |
|---|---|---|---|---|---|---|---|---|
| DATE | STEP | Description of NC Section A | Corrective Action Section B | | | Verification Section C | Approval Chief Eng | Approval QC Inspector |
| | | | Initial Chief Eng | Action Description Chief Eng | Sign & Date | | | |
| | | | | | | | | |
| | | | | | | | | |
| | | | | | | | | |

**NOTE:** Date & initial all entries

H:\fFORMS\Quality Assurance\approved QA\NCRWO RevE

| DART AEROSPACE LTD | Work Order: | 68376 |
|---|---|---|
| | | |
| Description: | Part Number: | D4334-7 |
| | | |
| Inspection Dwg: D4334-7 Rev: PA8. | | Page 1 of 1 |

# FIRST ARTICLE INSPECTION CHECKLIST

## THERMOFORMING SECTION

| Description | Accept | Reject | Method of Inspection | Comments |
|---|---|---|---|---|
| Inside Radii less than 1/4 " | ✓ | | | |
| Shape Definition | ✓ | | | |
| Texture Retention | ✓ | | | |
| Material imperfections such as bumps, cracks, voids, scratching | ✓ | | | |
| | | | | |
| | | | | |
| | | | | |
| | | | | |

| Measured by: | DL | Date: | 11/04/13 |
|---|---|---|---|

## TRIMMING SECTION

| Drawing Dimension | Tolerance | Actual Dimension | Accept | Reject | Method of Inspection | Comments |
|---|---|---|---|---|---|---|
| 7.67" | +/- 0.030 | 7.5625" | ✓ | | TAPE DL-01 | see attached |
| 6.13" | +/- 0.030 | 6.125" | ✓ | | TAPE DL-01 | 6.15 |
| 2.10" | +/- 0.030 | 2.137" | ✓ | | Vern DL-02 | 2.15 |
| 2.88" | +/- 0.030 | 2.89" | ✓ | | Vern DL-02 | 2.80 |
| 3.63" | +/- 0.030 | 3.606" | ✓ | | Vern DL-02 | |
| | | | | | | |
| | | | | | | |
| | | | | | | |
| | | | | | | |
| | | | | | | |
| | | | | | | |
| | | | | | | |

| Measured by: | DL | Date: | 11/04/13 |
|---|---|---|---|
| Audited by: | PAB for ems.1 | Date: | 11.07.14 |
| Preliminary Approval: | ~~PAB only dwg~~ Not signing | Date: | ~~11-07-14~~ |

| Rev | Date | Change | Revised by | Approved |
|---|---|---|---|---|
| B | 10.04.14 | Added preliminary approval | KJ | |

10.04.14

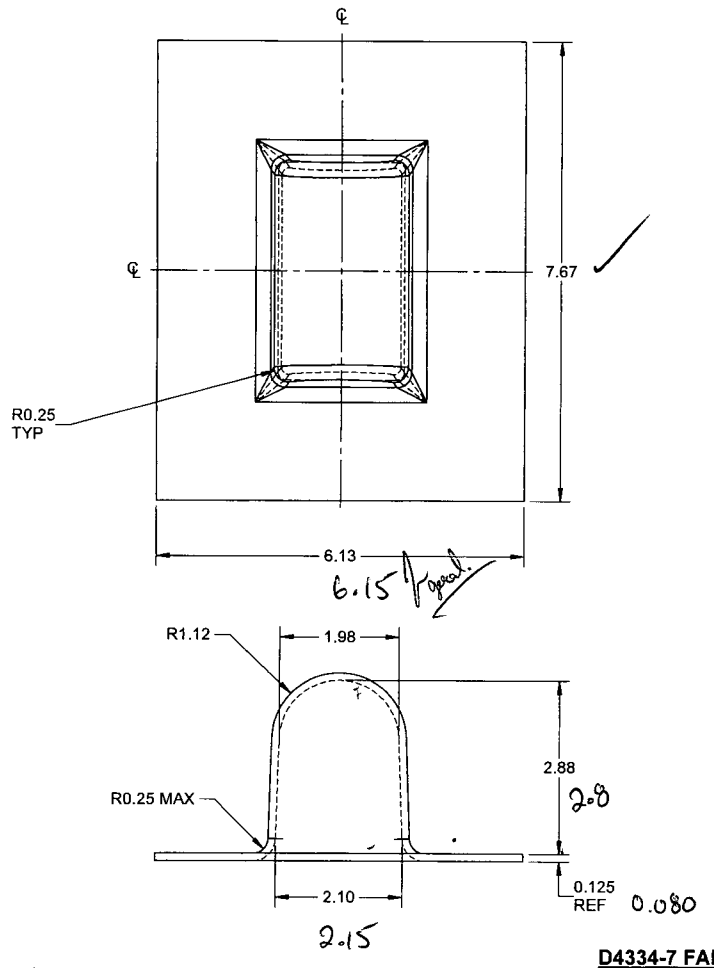


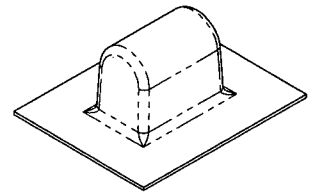

#68376

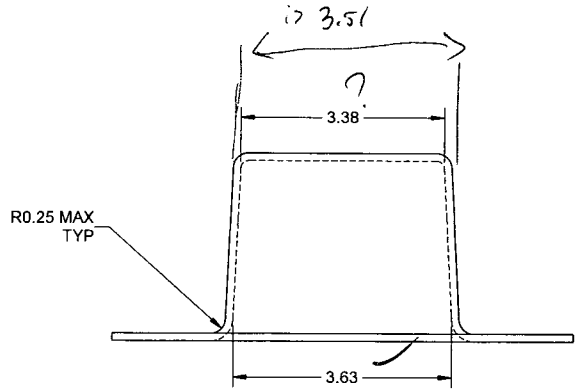


**D4334-7 FAIRING**

NOTES:
1) MATERIAL: F60029-GY3778 GREY LEXAN SHEET (HEAVY HAIRCELL TEXTURE) , 0.125 THICK
REF DART SPEC MLEXS.125-F60029-04
2) FINISH: N/A
3) TOLERANCES: PER DART QSI 018 UNLESS OTHERWISE NOTED
4) UNITS: INCHES UNLESS OTHERWISE NOTED
5) BREAK SHARP EDGES: 0.005 TO 0.010 MAX
6) IDENTIFICATION: IDENTIFY PER QSI 044 6.1
7) WEIGHT: 0.40 lbs
8) THERMOFORM USING DTXXXX MOULD

| | | |
|---|---|---|
| DESIGN | | **DART AEROSPACE LTD** HAWKESBURY, ONTARIO, CANADA |
| DRAWN | | |
| CHECKED | | DRAWING NO. D4334 — REV. PA8 — SHEET 5 OF 5 |
| MFG. APPR. | | |
| APPROVED | | TITLE BRACKET — SCALE NTS |
| DE APPR. | | |
| DATE 11.02.10 | | |

COPYRIGHT © 2011 BY DART AEROSPACE LTD
THIS DOCUMENT IS PRIVATE AND CONFIDENTIAL AND IS SUPPLIED ON THE EXPRESS CONDITION THAT IT IS NOT TO BE USED FOR ANY PURPOSE OR COPIED OR COMMUNICATED TO ANY OTHER PERSON WITHOUT WRITTEN PERMISSION FROM DART AEROSPACE LTD.

Dart Aerospace Ltd

| W/O: | | WORK ORDER CHANGES | | | | | |
|---|---|---|---|---|---|---|---|
| DATE | STEP | PROCEDURE CHANGE | By | Date | Qty | Approval Chief Eng / Prod Mgr | Approval QC Inspector |
| | | | | | | | |
| | | | | | | | |

**Part No:** _____ **PAR #:** _____ **Fault Category:** _____ **NCR:** Yes No **DQA:** _____ **Date:** _____

**Resolution:** _____ **Disposition:** _____ **QA: N/C Closed:** _____ **Date:** _____

| NCR: | | WORK ORDER NON-CONFORMANCE (NCR) | | | | | | |
|---|---|---|---|---|---|---|---|---|
| DATE | STEP | Description of NC Section A | Corrective Action Section B | | | Verification Section C | Approval Chief Eng | Approval QC Inspector |
| | | | Initial Chief Eng | Action Description Chief Eng | Sign & Date | | | |
| | | | | | | | | |
| | | | | | | | | |
| | | | | | | | | |

**NOTE:** Date & initial all entries

H:\fFORMS\Quality Assurance\approved QA\NCRWO RevE

## Daryl Leger

**From:** Daniel Campbell <dcampbell@dartaero.com>
**Sent:** Monday, April 04, 2011 9:16 AM
**To:** 'Daryl Leger'
**Cc:** 'JEANLUC MENARD'; Bill Beckett; 'Linda Lacelle'; 'Harvey Siemens'; 'Mike Petsche'
**Subject:** D4323 & D4380 - Parts can be untrimmed

To Whom It May Concern,

The parts with p/n's D4323-XX and D4380-XX can be shipped to Calgary untrimmed, or even slightly out of spec in order to get parts here asap so they can be installed on the Westpac machine.

Thanks,

Daniel Campbell
Mechanical Engineer
**DART** Aerospace Ltd.

P: 403-717-0325
F: 403-717-1288
E: dcampbell@dartaero.com
W: www.dartaero.com
M: 1060 McTavish Road, NE, Calgary, Alberta, T2E 7G6

The information contained in this transmission is privileged and confidential and intended only for the use of the individual or entity to whom it is addressed. If you are not the intended recipient, you are hereby notified that any distribution, copying, disclosure or taking of any action in reliance on the contents of this transmission is strictly prohibited and review by any individual other than the intended recipient shall not constitute waiver of privilege. If you have received this transmission in error, please notify me immediately and delete the original transmission.

## Daryl Leger

**From:** Daniel Campbell <dcampbell@dartaero.com>
**Sent:** Thursday, April 14, 2011 3:32 PM
**To:** 'Daryl Leger'
**Cc:** 'Harvey Siemens'; 'Mike Petsche'
**Subject:** D4334-7 Fairing Dims

Hi Daryl,

As per our phone conversation, please ship the D4334-7 part even though the dims are slightly out of tolerances as per the dwg.

Cheers,

Daniel Campbell
Mechanical Engineer
**DART** Aerospace Ltd.

P: 403-717-0325
F: 403-717-1288
E: dcampbell@dartaero.com
W: www.dartaero.com
M: 1060 McTavish Road, NE, Calgary, Alberta, T2E 7G6

The information contained in this transmission is privileged and confidential and intended only for the use of the individual or entity to whom it is addressed. If you are not the intended recipient, you are hereby notified that any distribution, copying, disclosure or taking of any action in reliance on the contents of this transmission is strictly prohibited and review by any individual other than the intended recipient shall not constitute waiver of privilege. If you have received this transmission in error, please notify me immediately and delete the original transmission.